REV.	ECN.NO.	MODIFY.CONTENT

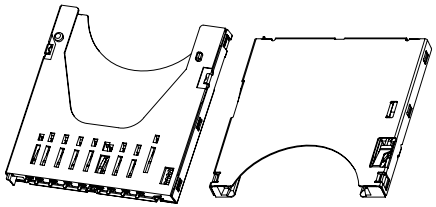

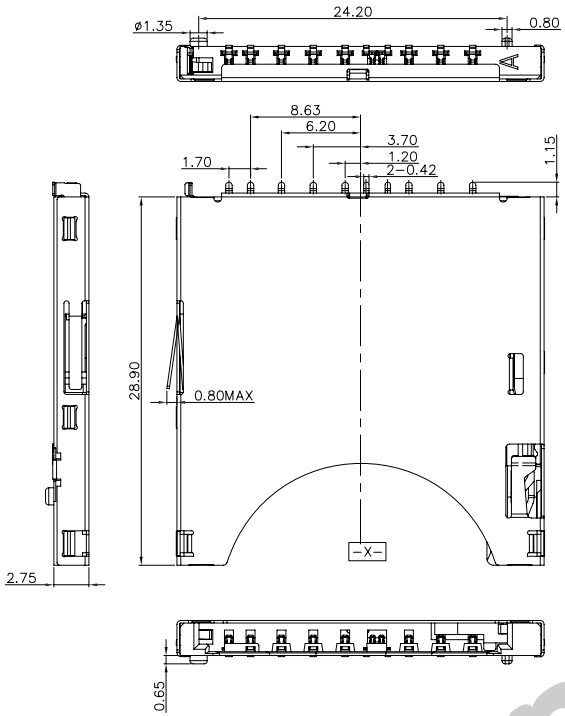

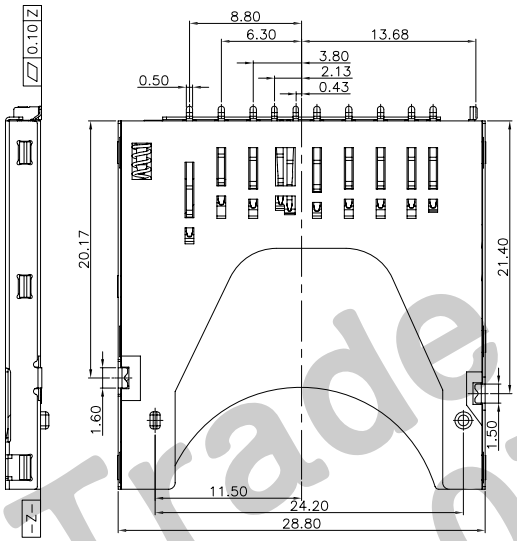

NOTES :

1. MATERIAL :
   - 1.1 HOUSING:LCP UL94 V-0, BLACK COLOR.
   - 1.2 SHELL: Stainless Steel.
   - 1.3 CONTACT: Copper alloy.
2. FINISH :
   - 2.1 CONTACT: GOLD PLATING ON CONTACT AREA, MATTE TIN 100u"MIN ON SOLDERTAIL AREA. 50u" MIN NICKEL PLATING OVERALL.
   - 2.2 SHELL: 30u" MIN NICKEL PLATING OVERALL. Au 1u"MIN ON SOLDERTAIL AREA.
3. Electrical Characteristics:
   - 3.1 Operating voltage : 100V AC(rms)/DC.
   - 3.2 Current rating : 0.5 A.
   - 3.3 Operating Temperature: -25°C~+85°C.
   - 3.4 Contact resistance: 100 m ohms max.
   - 3.5 Insulation resistance: 1000M ohms min. at 250VDC.
   - 3.6 Dielectric withstanding voltage:500 VAC/1minute.

PART.NO.:
TW10-AP401-**

- 42: 功能区镀金1U",幅脚镀雾纯幅至少100U"
- 43: 功能区镀金3U",幅脚镀雾纯幅至少100U"
- 44: 功能区镀金5U",幅脚镀雾纯幅至少100U"
- 45: 功能区镀金10U",幅脚镀雾纯幅至少100U"
- 46: 功能区镀金15U",幅脚镀雾纯幅至少100U"
- 47: 功能区镀金30U",幅脚镀雾纯幅至少100U"

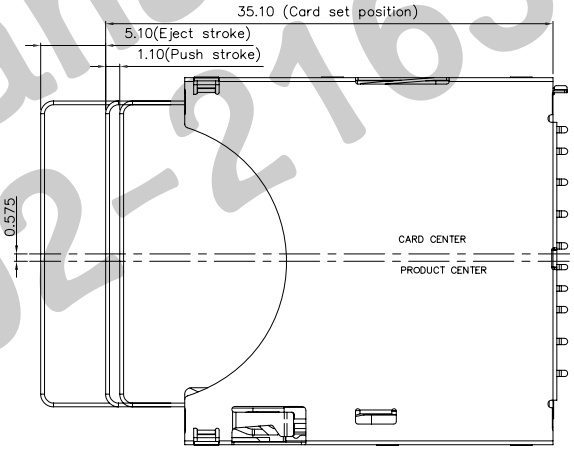

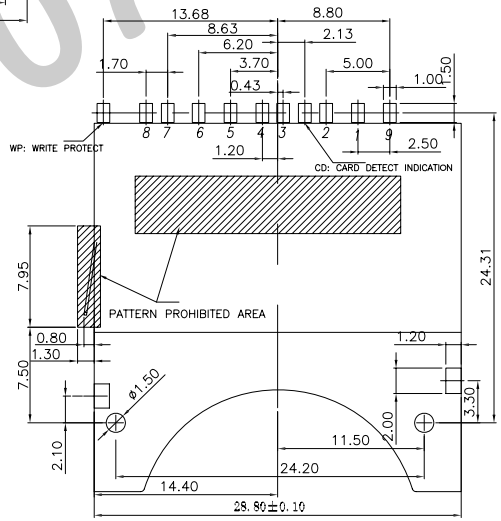

RECOMMENDED PCB LAYOUT
(ALL TOLERANCE ARE ±0.05)

Pin No.		SD	MMC
P1	MMC-DAT3 SD-CD/DAT3	1P	1P
P2	MMC-CMD SD-CMD	2P	2P
P3	MMC-VSS1 SD-VSS1	3P	3P
P4	MMC-VDD SD-VDD	4P	4P
P5	MMC-CLK SD-CLK	5P	5P
P6	MMC-VSS2 SD-VSS2	6P	6P
P7	MMC-DAT0 SD-DAT0	7P	7P
P8	SD-DAT1	8P	
P9	SD-DAT2	9P	

CIRCUIT:

WITHOUT CARD	CARD INSERTED WRITE PROTECT : LOCK	CARD INSERTED WRITE PROTECT : UNLOCK
WP — GROUND	WP — GROUND	WP — GROUND
CD — #3	CD — #3	CD — #3

GENERAL TOLERANCE		DWG.NO.	TW10-AP401-00	PART.NO.	TW10-AP401-**	DRAWN	zgm 2009.08.20	UNIT	mm	SCALE	NO SCALE
x.±0.50	x. °±5 °	REV.	A	TITLE	SD Push Push conn.(带锁型)	CHECKED		HDC 有限公司			
.x±0.25	.x °±2 °	SIZE		SHEET	1 OF 1	APPROVED					
.xx±0.15	.xx±1 °	A4									

Gana Trade.com
02-2163-0766