REV. LTR.	DESCRIPTION	SIGN	DATE
1	Add the key sizes of sign	yang gang	2009.10.23
2	Add the "E "schematic drawing	yang gang	2010.8.13
6	Add new P/N	Matt	2012.09.12

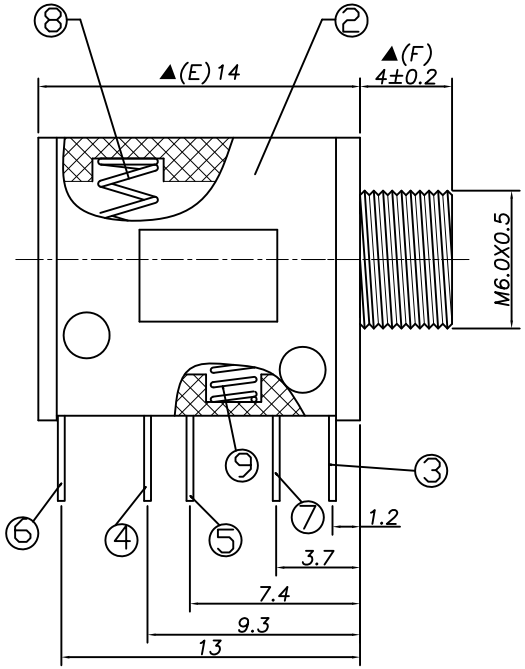

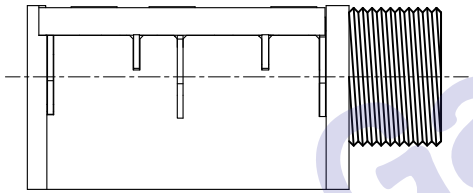

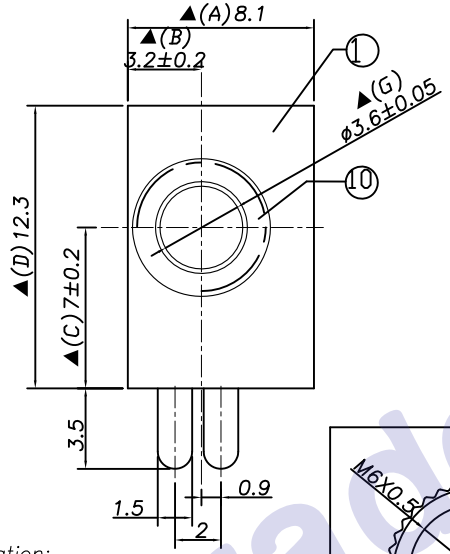

P.C.B Layout
(Copper-sided view)

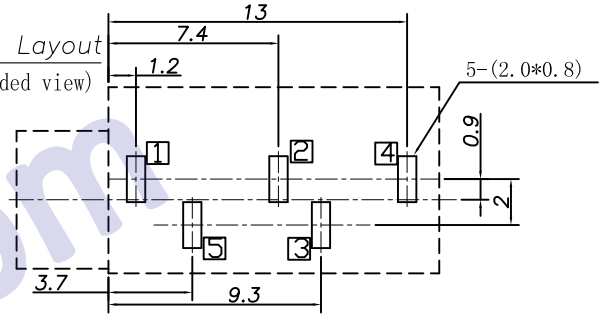

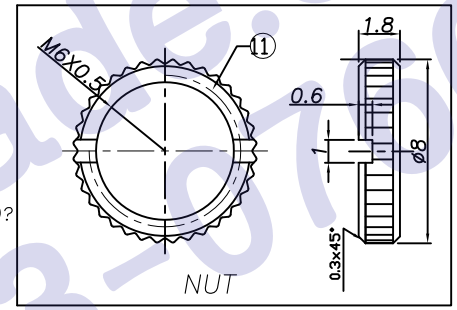

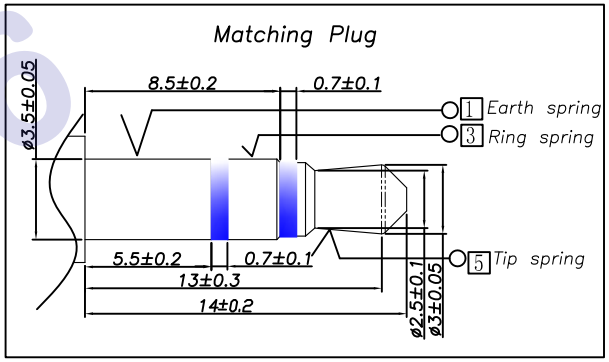

Specification:
1.Rating ?DC 30V 0.5A?
2.Contact resistance?≤30mΩ?
After test:≤50mΩ
3.Insulation resistance??100MΩ (500VDC)?
After test:?50MΩ
4.Withstand voltage?500VAC ?
5.Insertion and extraction force?3N?30N?
6.life test?5000cycles min?
7.Operation temperature range?-20?70?
8.Preservative temperature range?-40?85?
9.Sign"? "is importance dimension

Ordering information:
PJ3025M - □ PB □□ T □□ 3
(1) (2) (3) (4) (5) (6) (7)

(1):Series No.
(2):Schematic option:
A B C D E F
(3):Material of housing:
PB=PBT(Standard)
46=PA46
(4):Bushing or Housing color:
Zero—0A=Black 2R=Red(0046)
5W=Green(0169) 6A=Blue(0011)
(5):Terminal plating
T=The terminal are Tin(Sn)plating,but 3# terminal is silver(Ag) plating (Standard)
S=Silver(Ag) plating
(6):Special option: Cover Material

	Cover Material	Accessory
00=	PBT	Nut need not been assembed onto audio jack
0A=	PC	Nut need not been assembed onto audio jack
0B=	PBT	Nut need been assembed onto audio jack
0C=	PC	NO
0D=	PBT	NO

(7):Packing mode:
3=Plastic box packing

P/N	PJ3025M-A	PJ3025M-B	PJ3025M-C
Schematic	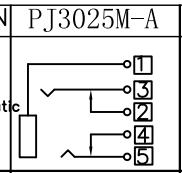	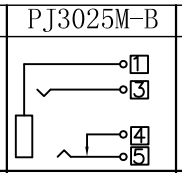	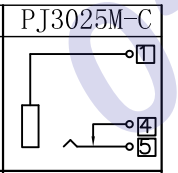
	PJ3025M-D	PJ3025M-E	PJ3025M-F
	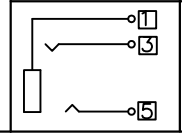	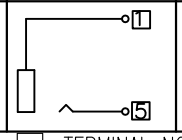	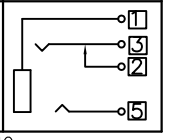

□: TERMINAL NO.

NO.	DESCRIPTION	QTY	MATERIAL	PART NO.	PLATING
11	Nut	1	Copper alloy		Nickel(Ni) plating
10	Bushing	1	Copper alloy	PJ3025M-88 (ZT-JK0021)	Nickel(Ni) plating
9	spring-2	1	Spring Wire	PJ30550-66A	Nickel(Ni) plating
8	spring-1	1	Spring Wire	PJ30550-66B	Nickel(Ni) plating
7	Tip spring 5	1	Phosphor bronze T=0.25	PJ30250-05	Tin(Sn) plating
6	Shunt terminal 4	1	Brass T=0.30	PJ30250-04 (WP-JK0007)	Tin(Sn) plating
5	Shunt terminal 2	1	Brass T=0.30	PJ30250-02 (WP-JK0006)	Tin(Sn) plating
4	Ring spring 3	1	Phosphor bronze T=0.25	PJ30250-03B(仅用于B/D两种线路) (Only used to B/D two kinds of circuit) PJ30250-03 (仅用于A/F线路) (Only used to A/F kinds of circuit)	Silver(Ag) Plating
3	Earth terminal 1	1	Brass T=0.25	PJ30250-01 (PP-JK0005)	Tin(Sn) plating
2	Cover	1	PBT/PC	PJ30250-S2 (GZ-JK0003)	
1	Housing	1	PBT/PA46	PJ30250-S1 (ST-JK0019)	

UNIT:MM	TYPE: ø3.5 PHONE JACK	MODEL NO: PJ3025M-_ PB__T003	PAPER NO: A4	PAGE 1 OF 1
			TOLERANCE ±0.3 / ANGLES ±2°	SCALE FULL / VER 6
DESIGNER BY:	Matt 2012.09.12			
CHECK BY:	Mei 2012.09.12			
APPROVED BY:				

HDC有限公司

Gamtrade.com 0221-63-0766