更改 REV	设变内容 MODIFICATION	日期 DATE	制图 DRAW	核准 APPROVE
A	图面发行	2011/8/29	Oscar	Oscar

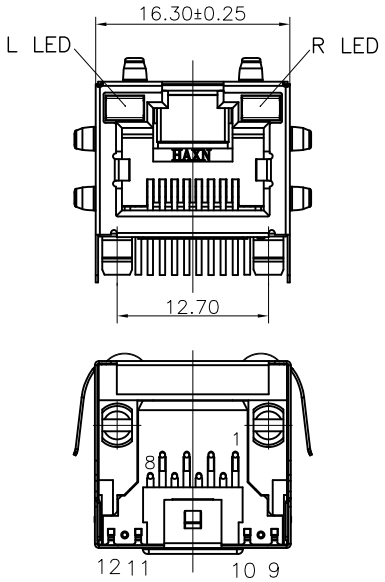

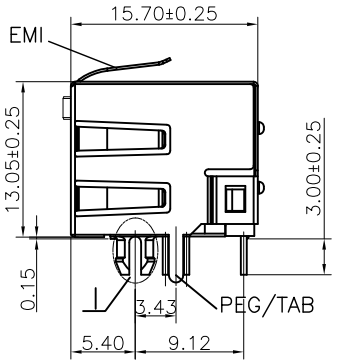

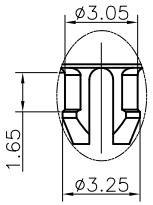

DETAIL: I
SCALE:2:1

NOTES:

MATERIAL:
1.HOUSING MATERIAL :GLASS FILLED POLYESTER(UL94V-0).
2.CONTACT MATERIAL :PHOSPHOR BRONZE ø0.46mm (C5100).
3.PLATING :GOLD PLATING OVER NICKEL.
4.SHIELD: COPPER ALLOY(OR STEEL ALLOY) 0.20mm THICKNESS PLATING NI.
5.LED: OPTION.

ELECTRICAL:
1.VOLTAGE RATING :125 VAC RMS.
2.CURRENT RATING :1.5 AMP.
3.CONTACT RESISTANCE :50 MILLIOHMS MAX.
4.INSULATION RESISTANCE :500 MEGOHMS MIN @ 500V DC.
5.DIELECTRIC WITHSTANDING
RESISTANCE :1000V AC RMS 50Hz. 1MIN.
6.LED RATINGS:FORWARD VOLTAGE:2.2 VOLTS TYPICAL.
REVERSE VOLTAGE:5 VOLTS MAXIMUM.

MECHANICAL:
1.DURRABILITY:750 CYCLES MIN.
2.PCB RETENTION PRE-SOLDER

ENVIRONMENTAL:
1.STORAGE :-40°C TO +85°C.
2. OPERATION: -20°C TO 70°C.

MATES WITH MODULAR PLUG CONFORMING TO FCC PART 68,SUBPART F.

PART NUMBER:

9801-611882XXXX

98 SERIES:
(LED&W/O LED JACK)

Product Stype:
01—普通型 分体式屏蔽

Shield Stype:
1—W/O Shield 2—Half Shield 半包
3—不开天窗 4—开上天窗 5—左右开天窗 6—上,左右开天窗
7—上开天窗,左右半窗 8—上开窗,右有窗,左无窗

PIN STYPES :
1—圆针 2—扁针

PORTS:
1- 1X1 PORT 2 - 1X2 PORTS
4 -1X4 PORTS 8 - 1X8 PORTS

Positions:
6-6P 8-8P

Contacts:
4-4C 6-6C 8-8C

PEG/TAB &BACK PEG (连板脚&后背板脚)
0-W/O PEG 1-脚后3.56 无后背板脚
2-脚后3.43 无后背板脚

Gold plating u"
1-Fu" 2-2u" 3-3u" 4-6u"
5-15" 6-30u" 7-50u"

Plastics Material&Color:
1-PBT+20%GF Black
2-PA46 Black

LED Stype:
0-W/O LED
1-L Led:Green R Led:Yellow
2-L Led:Yellow R Led:Green
3-L Led:Green&Orange R Led:Yellow
4-L Led:Green&Red R Led:Yellow
5-L Led:Green&Yellow R Led:Yellow
6-L Led:Red R Led:Green

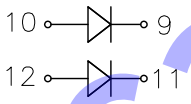

单色灯脚位图

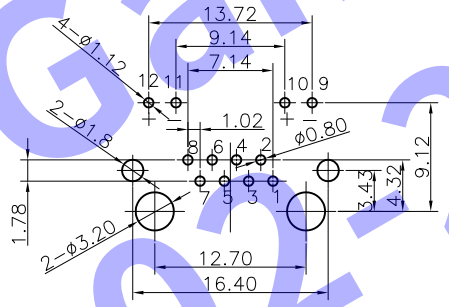

PC BOARD LAYOUT

QC :Inspection Item
CPK :Cp/Cpk and SPC Control Item

DIMENSION IN mm [Inch]

TOLERANCE UNLESS OTHERWISE SPECIFIED

.X± 0.20	X.°± 1°
.XX± 0.15	.X°± 0.5°
.XXX± 0.075	

H D C 有 限 公 司

专案号 FILE NO.

图号 DWG NO. 9801-8P-002

名称 TITLE 98 1X1 8P8C LED JACK (脚后3.43)

核准 APPROVE	审核 CHECK	制图 DRAW	角法 PROJ.	页数 SHEET	比例 SCALE	图纸 SIZE	更改 REV
	JDL	Oscar		1 / 1	1:1	A3	A

GanaTrade.com
02-2163-0766~7