RoHS COMPLIANT

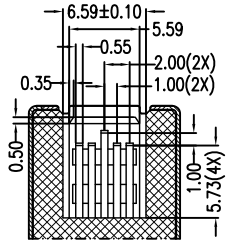

SECT B-B

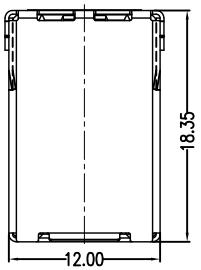

Pin Number	Signal Name
1	VBUS
2	D-
3	D+
4	GND
5	StdB_SSTX-
6	StdB_SSTX+
7	GND-DRAIN
8	StdB_SSRX-
9	StdB_SSRX+

DATE CODE DESCRIPTION

6 0 11 5
- Friday
- 11 Weeks
- Year
- SOSHINE

Unit:mm

Type	Dim A
SSU3BR-09F1B1PBU3	2.80
SSU3BR-09F8B1PBU3	2.00

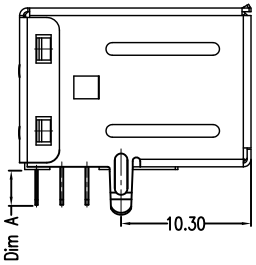

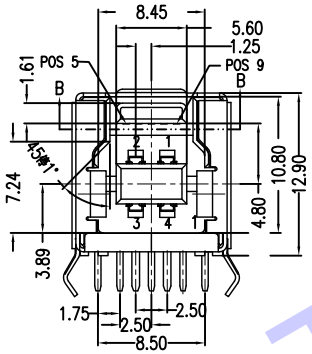

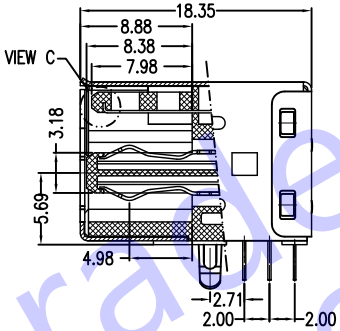

SECT A-A

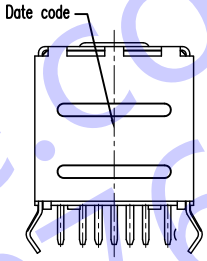

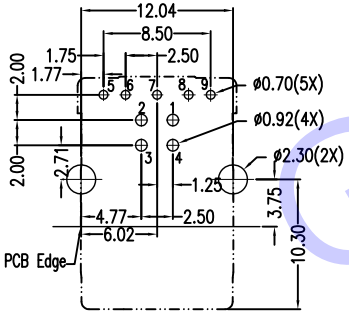

PCB LAYOUT(T=1.00~1.60mm)
COMPONENT SIDE

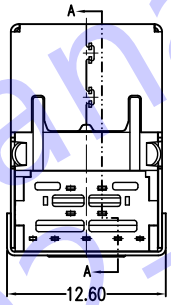

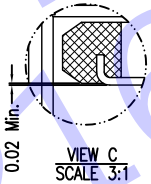

VIEW C
SCALE 3:1

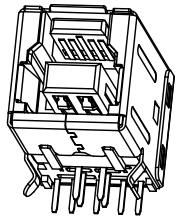

NOTES:

*Material

Housing: PBT+30%G.F UL94V-0 Color:Black or Blue
Baffle : Nylon66+30%G.F, UL 94-0 Rated Color:Black or Blue
Contact A(5P): Brass; Gold plating on contact area,Tin(100u" min.) plating on solder tail,Nickel (50u" min.) underplating overall
Contact B(4P): Phosphor Bronze; Gold plating on contact area, Tin(100u" min.) plating on solder tail,Nickel (50u" min.) underplating overall
Shell: Brass; Full Nickel (40u" min.) Plating.

*Mechanical

Insertion Force: 2.5Kg Max
Withdrawal Force: 1.0~2.5Kg
Durability: 5000 Cycles

*Electrical Specification

Current Rating: 1.8 Amp
Insulation Resistance: 100MΩ Min
Contact Resistance: 30mΩ Max
Dielectric Withstanding Voltage: 100V AC Min

*Environmental

Operating Temperature: -40°c to +85°c.

*How to Order:

USB-09F1B4PBU 3
- 3: Tray
- U: Lead Free
- PB: Phosphor Bronze(4P)+Brass(5P)
- 1:Black 4: Blue
- B: PBT
- 1:Dip 2.80, 8:Dip 2.00
- Au: A:>0.8, D:15u", F:30u"
- NO. of Contacts
- Series No.

GanaTrade.com
02-2163-0766 57

REV	DESCRIPTION	DATE
E	确定料号	11'-07-06
D	外壳增加扣位，脚改短配合PCB	10'-12-22
C	端子改短配合 及塑胶槽加平	10'-05-27
A	图 面 发 行	09'-10-23

QUALITY SYMBOLS
■: CRITICAL ⊠: MAJOR
▽: ZERO DEFECT ▽: S.P.C

HDC 有限公司

UNIT	SCALE	TOLERANCES	ITEM	DESC	Q'TY	MATERIAL	REMAKS	PART REMAKS
mm	3:1	DIM. ±0.30 ANGLE: 3°	APPROVED	CHECKED	DESIGN	DRAWN	PART NO. USB-09F1B4PBU3	SHT 1/1
							DESCRIPTION USB 3.0 B Type Receptacle 【客户用图】	
							DRAWING NO.	REV E