RoHS COMPLIANT

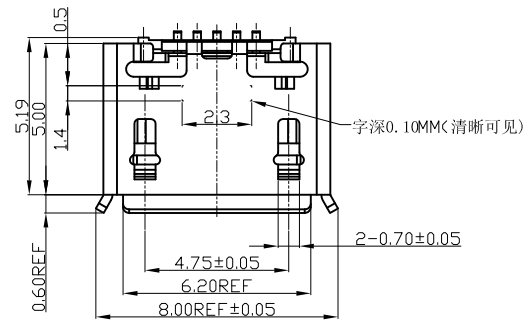

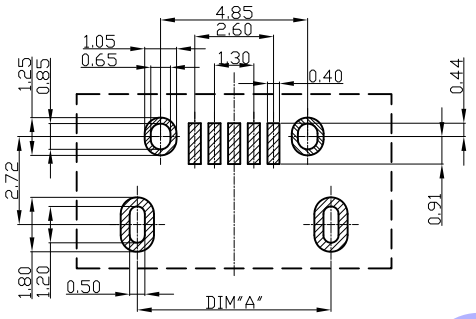

RECOMMEND PCB LAYOUT(TOP VIEW)

GENERAL TOLERANCE ±0.05

NOTES:
1.MECHANICAL:
MATING FORCE: 35N MAX.
UNMATING FORCE: 10N MIN,INITIAL.
8~20N AFTER 10000 CYCLES.
DURABILITY: 5000 CYCLES MIN.
2.ELECTRICAL:
CURRENT: 1.0A
VOLTAGE: 30V MAX
WITHSTANDING VOLTAGE: 100V AC
CONTACT RESISTANCE: 30 mΩ MAX INITIAL;
40 mΩ MAX AFTER 10000 CYCLES
3.ENVIRONMENTAL
OPERATING TEMPERATURE RANGE -30°C ~ +80°C
4. SALT SPRAY : 24 H AT 35%DC WITH
5%-SALT-SOLUTION CONCENTRATION.
5.PRODUCT SPEC:SP-MICRO USB-001
6.PACKAGE SPEC:DWG-PK MUB-0XX
7.PRODUCT MEET FOR ROHS STANDARD

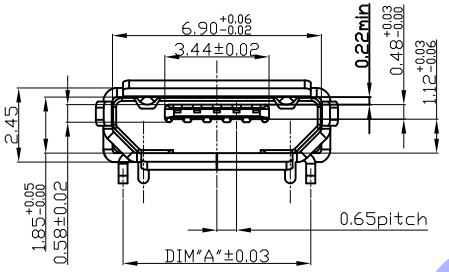

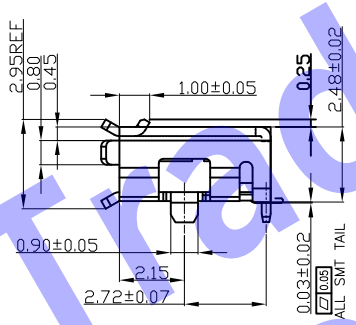

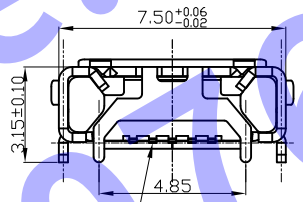

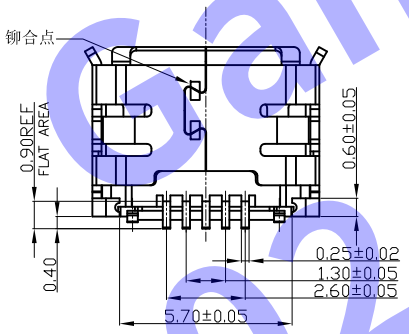

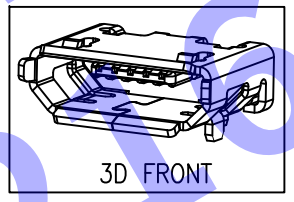

PART NO.	DESCRIPTION	DIM A
01	MICRO USB 5PIN DIP(7.20MM) +4DIP ; WITHOUT POST	7.20
02	MICRO USB 5PIN DIP(6.40MM) +4DIP ; WITHOUT POST	6.40
03	MICRO USB 5PIN DIP(5.65MM) +4DIP ; WITHOUT POST	5.65
04	MICRO USB 5PIN DIP(5.50MM) +4DIP ; WITHOUT POST	5.50

REV	DESCRIPTION	DATE
A	图 面 发 行	09'-10-23

QUALITY SYMBOLS
■: CRITICAL ☒: MAJOR
▽: ZERO DEFECT ▽: S.P.C

UNIT: mm
SCALE: 3:1
TOLERANCES: DIM. ±0.30 ANGLE: 3°

HDC 有限公司

ITEM | DESC | Q'TY | MATERIAL
APPROVED | CHECKED | DESIGN | DRAWN

PART NO. 112-05TRXXUNA
REMAKS
PART REMAKS SHT 1/1
DESCRIPTION MICRO USB 5S B TYPE牛角型斜后盖 插板5.55 【客户用图】
DRAWING NO.
REV A

GanaTrade.com 02-2163-07607